Work Order ID 113276

February-12-14 10:47:00 AM

113276

Item ID: D3488-041 **Accept** *N9000040100* **Setup Start** *NS1*

Revision ID: **Stop** *NS2*

Item Name: Blade Fitting LH

Start Date: 2/12/14 **Start Qty:** 12.00 *12* **Cust Item ID:**

Required Date: 2/12/14 **Req'd Qty:** 12.00 *12* **Customer:**

Reference:

Run Start *NR1*

Stop *NR2*

Approvals: **Process Plan:** MLJ **Date:** 14-02-13 **Tooling:** _____ **Date:** _____

QC: _____ **Date:** _____ **SPC (Y/N):** _____ **Date:** _____

Sequence ID/ Work Center ID	Operation Description	Set Up/ Run Hours	Tool ID	Tool #	Plan Code	Accept Qty	Reject Qty	Reject Number	Insp. Stamp
Draw Nbr / **Revision Nbr**: D3488 / Rev B; DSK101 / REV D									
100		0.00							DAS 40 9-89
100	DOOSAN LATHE					10	Ø		
Doosan	**Memo**	0.00							14/02/27
Doosan Lathe	1-Turn as per Dwg DSK 101 & Folio FA625								
	2-Deburr								
110	QC2- Inspect parts off machine FAI/FAIB	0.00							DAS 40 9-89
110						10	Ø		
QC	**Memo**	0.00							14/02/27
Quality Control									

DQA: _____ Date: _____

WORK ORDER NON-CONFORMANCE / UPDATE

QA Closed: Date: Work Order update only ☐

Work Order: _____

Part No. _____

NCR No. _____

DISPOSITION

Rework ☐
Scrap ☐
Use-as-is ☐
Suspected Unapproved ☐

AGAINST DEPARTMENT/PROCESS

Skid-tube ☐ Crosstube ☐ Water Jet ☐ Engineering ☐
Machining ☐ Small Fab ☐ Prod. Eng. Coor. ☐ Quality ☐
Thermoforming ☐ Finishing ☐ Rec/Store/Packaging ☐ Other ☐
Large Fab ☐ Composite ☐ Supplier ☐

Root Cause		Date	Step	Qty	Description of work order update or non-conformance	Initial Chief Eng	Action Description	Sign & Date	Verification	QC Inspector
Design	☐									
Doc/Data	☐									
Equip/Tooling	☐									
Handling/Pre	☐									
Material	☐									
Operator	☐									
Offset/Setup	☐									
Process	☐									
Supplier	☐									
Training	☐									
Transport	☐									
Unapproved	☐									

FAULT CATEGORY

Landing Gear

☐ Bending
☐ Centre Not Concentric
☐ Cracks
☐ Crimp/Kink/Ripple/Wave
☐ Cuffs
☐ Crushing
☐ Heat Treat
☐ Inspection Strip in Tube
☐ Marks/Chatter
☐ Turning Sequence
☐ Wave/Twist in Tube

General

☐ Bend
☐ BOM/Route
☐ Broken/Damage/Defect
☐ Burrs
☐ Contamination
☐ Countersink
☐ Cut Too Short
☐ Drawing
☐ Drill Holes
☐ Finish
☐ Fit/Function
☐ Folio/Program
☐ Grain
☐ Hardware
☐ Inspection Incomplete/Unqualified
☐ Instructions Incomplete/Unclear
☐ Misaligned/off center
☐ Mislabeled
☐ Misread
☐ Off-set
☐ Out of Calibration
☐ Out of Sequence
☐ Outside Dimensions
☐ Over/Under tolerance
☐ Part Incorrect
☐ Part Lost/Missing
☐ Part Moved
☐ Positioned Wrong
☐ Power Loss/Surge
☐ Pressure/Forced
☐ Set-up
☐ Temperature/Cure
☐ Weld
☐ Wrong Stock Pulled
☐ Other

_____
_____
_____

Work Order ID 113276

February-12-14 10:47:00 AM

113276

Item ID: D3488-041 **Accept** *N900040100* **Setup Start** *NS1*

Revision ID: **Stop** *NS2*

Item Name: Blade Fitting LH

Start Date: 2/12/14 **Start Qty:** 12.00 *12*

Required Date: 2/12/14 **Req'd Qty:** 12.00 *12*

Reference:

Cust Item ID:

Customer:

Approvals: **Process Plan:** _____ **Date:** _____ **Tooling:** _____ **Date:** _____

QC: _____ **Date:** _____ **SPC (Y/N):** _____ **Date:** _____

Run Start *NR1*

Stop *NR2*

Sequence ID/ Work Center ID	Operation Description	Set Up/ Run Hours	Tool ID	Tool #	Plan Code	Accept Qty	Reject Qty	Reject Number	Insp. Stamp
120		0.00							
120	HAAS CNC VERTICAL MACHINING #1					10	0		MH 14/03/12
HAAS 1	**Memo**	0.00							
HAAS CNC vertical machine #1	1-Machine as per Folio FA625 & Dwg D34882-Deburr								
130	QC2- Inspect parts off machine FAI/FAIB	0.00							
130						10	0		MH 14/03/12
QC	**Memo**	0.00							
Quality Control									
140	QC8- Inspect parts - second check	0.00							
140						10	0		14/03/13
QC	**Memo**	0.00							
Quality Control									

DQA: _____ Date: _____

WORK ORDER NON-CONFORMANCE / UPDATE

DART AEROSPACE

QA Closed: Date: Work Order update only ☐

Work Order: _____

Part No. _____

NCR No. _____

DISPOSITION

Rework ☐
Scrap ☐
Use-as-is ☐
Suspected Unapproved ☐

AGAINST DEPARTMENT/PROCESS

Skid-tube ☐ Crosstube ☐ Water Jet ☐ Engineering ☐
Machining ☐ Small Fab ☐ Prod. Eng. Coor. ☐ Quality ☐
Thermoforming ☐ Finishing ☐ Rec/Store/Packaging ☐ Other ☐
Large Fab ☐ Composite ☐ Supplier ☐

Root Cause		Date	Step	Qty	Description of work order update or non-conformance	Initial Chief Eng	Action Description	Sign & Date	Verification	QC Inspector
Design	☐									
Doc/Data	☐									
Equip/Tooling	☐									
Handling/Pre	☐									
Material	☐									
Operator	☐									
Offset/Setup	☐									
Process	☐									
Supplier	☐									
Training	☐									
Transport	☐									
Unapproved	☐									

FAULT CATEGORY

Landing Gear

☐ Bending
☐ Centre Not Concentric
☐ Cracks
☐ Crimp/Kink/Ripple/Wave
☐ Cuffs
☐ Crushing
☐ Heat Treat
☐ Inspection Strip in Tube
☐ Marks/Chatter
☐ Turning Sequence
☐ Wave/Twist in Tube

General

☐ Bend
☐ BOM/Route
☐ Broken/Damage/Defect
☐ Burrs
☐ Contamination
☐ Countersink
☐ Cut Too Short
☐ Drawing
☐ Drill Holes
☐ Finish
☐ Fit/Function
☐ Folio/Program
☐ Grain
☐ Hardware
☐ Inspection Incomplete/Unqualified
☐ Instructions Incomplete/Unclear
☐ Misaligned/off center
☐ Mislabeled
☐ Misread
☐ Off-set
☐ Out of Calibration
☐ Out of Sequence
☐ Outside Dimensions
☐ Over/Under tolerance
☐ Part Incorrect
☐ Part Lost/Missing
☐ Part Moved
☐ Positioned Wrong
☐ Power Loss/Surge
☐ Pressure/Forced
☐ Set-up
☐ Temperature/Cure
☐ Weld
☐ Wrong Stock Pulled
☐ Other

_____
_____
_____

Item ID: D3488-041 **Accept** *N900040100* **Setup Start** *NS1*
Revision ID: **Stop** *NS2*
Item Name: Blade Fitting LH
Start Date: 2/12/14 **Start Qty:** 12.00 *12* **Cust Item ID:**
Required Date: 2/12/14 **Req'd Qty:** 12.00 *12* **Customer:**
Reference:

Approvals: **Process Plan:** _____ **Date:** _____ **Tooling:** _____ **Date:** _____ **Run Start** *NR1*
QC: _____ **Date:** _____ **SPC (Y/N):** _____ **Date:** _____ **Stop** *NR2*

Sequence ID/ Work Center ID	Operation Description	Set Up/ Run Hours	Tool ID	Tool #	Plan Code	Accept Qty	Reject Qty	Reject Number	Insp. Stamp
150	Chemical Conversion Coat per QSI005 4.1	0.00				10	0	14317	
150									
HandFinish	**Memo**	0.00							
Hand Finishing									
160	White Gloss(Ref:4.3.5.1) per QSI005 4.3-Alum	0.00				10	0	14318	DAS 34 9-89
160	M 128027								
Powdercoat	**Memo**	0.00							
Powder Coating	START TIME: 10:00 OVEN TEMPERATURE: 385 FINISH TIME: 10:30								
170	QC3- Inspect Part Finish	0.00				10 RH	0	11/03/14	
170									
QC	**Memo**	0.00							
Quality Control									

DQA: _____ Date: _____

WORK ORDER NON-CONFORMANCE / UPDATE

QA Closed: Date: Work Order update only ☐

Work Order: _____

Part No. _____

NCR No. _____

DISPOSITION

Rework ☐
Scrap ☐
Use-as-is ☐
Suspected Unapproved ☐

AGAINST DEPARTMENT/PROCESS

Skid-tube ☐ Crosstube ☐ Water Jet ☐ Engineering ☐
Machining ☐ Small Fab ☐ Prod. Eng. Coor. ☐ Quality ☐
Thermoforming ☐ Finishing ☐ Rec/Store/Packaging ☐ Other ☐
Large Fab ☐ Composite ☐ Supplier ☐

Root Cause		Date	Step	Qty	Description of work order update or non-conformance	Initial Chief Eng	Action Description	Sign & Date	Verification	QC Inspector
Design	☐									
Doc/Data	☐									
Equip/Tooling	☐									
Handling/Pre	☐									
Material	☐									
Operator	☐									
Offset/Setup	☐									
Process	☐									
Supplier	☐									
Training	☐									
Transport	☐									
Unapproved	☐									

FAULT CATEGORY

Landing Gear

☐ Bending
☐ Centre Not Concentric
☐ Cracks
☐ Crimp/Kink/Ripple/Wave
☐ Cuffs
☐ Crushing
☐ Heat Treat
☐ Inspection Strip in Tube
☐ Marks/Chatter
☐ Turning Sequence
☐ Wave/Twist in Tube

General

☐ Bend
☐ BOM/Route
☐ Broken/Damage/Defect
☐ Burrs
☐ Contamination
☐ Countersink
☐ Cut Too Short
☐ Drawing
☐ Drill Holes
☐ Finish
☐ Fit/Function
☐ Folio/Program
☐ Grain
☐ Hardware
☐ Inspection Incomplete/Unqualified
☐ Instructions Incomplete/Unclear
☐ Misaligned/off center
☐ Mislabeled
☐ Misread
☐ Off-set
☐ Out of Calibration
☐ Out of Sequence
☐ Outside Dimensions
☐ Over/Under tolerance
☐ Part Incorrect
☐ Part Lost/Missing
☐ Part Moved
☐ Positioned Wrong
☐ Power Loss/Surge
☐ Pressure/Forced
☐ Set-up
☐ Temperature/Cure
☐ Weld
☐ Wrong Stock Pulled
☐ Other

_____
_____
_____

Work Order ID 113276
February-12-14 10:47:00 AM

113276

Item ID: D3488-041
Revision ID:
Item Name: Blade Fitting LH
Start Date: 2/12/14 **Start Qty:** 12.00 *12*
Required Date: 2/12/14 **Req'd Qty:** 12.00 *12*
Reference:

Accept *N900040100*

Setup **Start** *NS1*
Stop *NS2*

Cust Item ID:
Customer:

Run **Start** *NR1*
Stop *NR2*

Approvals: **Process Plan:** _____ **Date:** _____ **Tooling:** _____ **Date:** _____
QC: _____ **Date:** _____ **SPC (Y/N):** _____ **Date:** _____

Sequence ID/ Work Center ID	Operation Description	Set Up/ Run Hours	Tool ID	Tool #	Plan Code	Accept Qty	Reject Qty	Reject Number	Insp. Stamp
180 *180* HandFinish Hand Finishing	HandFinishing	0.00				10 LH	4	[illegible]	14/03/18
	Memo Install Inserts as per Dwg D3488	0.00							
190 *190* QC Quality Control	QC5- Inspect part completeness to step on W/O	0.00				10	∅	14-3-18.	DAS 34 9-89
	Memo	0.00							
200 *200* Packaging Packaging	Identify as per dwg & Stock Location: FP-001	0.00				10 LH	∅	[illegible]	14/03/18
	Memo	0.00							

DQA: _____ Date: _____

DART AEROSPACE

WORK ORDER NON-CONFORMANCE / UPDATE

QA Closed: Date: Work Order update only ☐

Work Order: _____

Part No. _____

NCR No. _____

DISPOSITION

Rework ☐
Scrap ☐
Use-as-is ☐
Suspected Unapproved ☐

AGAINST DEPARTMENT/PROCESS

Skid-tube ☐ Crosstube ☐ Water Jet ☐ Engineering ☐
Machining ☐ Small Fab ☐ Prod. Eng. Coor. ☐ Quality ☐
Thermoforming ☐ Finishing ☐ Rec/Store/Packaging ☐ Other ☐
Large Fab ☐ Composite ☐ Supplier ☐

Root Cause		Date	Step	Qty	Description of work order update or non-conformance	Initial Chief Eng	Action Description	Sign & Date	Verification	QC Inspector
Design	☐									
Doc/Data	☐									
Equip/Tooling	☐									
Handling/Pre	☐									
Material	☐									
Operator	☐									
Offset/Setup	☐									
Process	☐									
Supplier	☐									
Training	☐									
Transport	☐									
Unapproved	☐									

FAULT CATEGORY

Landing Gear

☐ Bending
☐ Centre Not Concentric
☐ Cracks
☐ Crimp/Kink/Ripple/Wave
☐ Cuffs
☐ Crushing
☐ Heat Treat
☐ Inspection Strip in Tube
☐ Marks/Chatter
☐ Turning Sequence
☐ Wave/Twist in Tube

General

☐ Bend
☐ BOM/Route
☐ Broken/Damage/Defect
☐ Burrs
☐ Contamination
☐ Countersink
☐ Cut Too Short
☐ Drawing
☐ Drill Holes
☐ Finish
☐ Fit/Function

☐ Folio/Program
☐ Grain
☐ Hardware
☐ Inspection Incomplete/Unqualified
☐ Instructions Incomplete/Unclear
☐ Misaligned/off center
☐ Mislabeled
☐ Misread
☐ Off-set
☐ Out of Calibration
☐ Out of Sequence

☐ Outside Dimensions
☐ Over/Under tolerance
☐ Part Incorrect
☐ Part Lost/Missing
☐ Part Moved
☐ Positioned Wrong
☐ Power Loss/Surge

☐ Pressure/Forced
☐ Set-up
☐ Temperature/Cure
☐ Weld
☐ Wrong Stock Pulled

☐ Other

_____
_____
_____

Item ID: D3488-041 **Accept** *N9000040100* **Setup Start** *NS1*
Revision ID: **Stop** *NS2*
Item Name: Blade Fitting LH

Start Date: 2/12/14 **Start Qty:** 12.00 *12*
Required Date: 2/12/14 **Req'd Qty:** 12.00 *12*
Reference:

Cust Item ID:
Customer:

Run Start *NR1*
Stop *NR2*

Approvals: **Process Plan:** _____ **Date:** _____ **Tooling:** _____ **Date:** _____
QC: _____ **Date:** _____ **SPC (Y/N):** _____ **Date:** _____

Sequence ID/ Work Center ID	Operation Description	Set Up/ Run Hours	Tool ID	Tool #	Plan Code	Accept Qty	Reject Qty	Reject Number	Insp. Stamp
210	QC21- Final Inspection - Work Order Release	0.00							
210 QC Quality Control	**Memo**	0.00					14-03-19		

14-03-19

DQA: _____ Date: _____

WORK ORDER NON-CONFORMANCE / UPDATE

QA Closed: Date: Work Order update only ☐

Work Order: _____

Part No. _____

NCR No. _____

DISPOSITION

Rework	☐
Scrap	☐
Use-as-is	☐
Suspected Unapproved	☐

AGAINST DEPARTMENT/PROCESS

Skid-tube ☐	Crosstube ☐	Water Jet ☐	Engineering ☐
Machining ☐	Small Fab ☐	Prod. Eng. Coor. ☐	Quality ☐
Thermoforming ☐	Finishing ☐	Rec/Store/Packaging ☐	Other ☐
Large Fab ☐	Composite ☐	Supplier ☐	☐

Root Cause		Date	Step	Qty	Description of work order update or non-conformance	Initial Chief Eng	Action Description	Sign & Date	Verification	QC Inspector
Design	☐									
Doc/Data	☐									
Equip/Tooling	☐									
Handling/Pre	☐									
Material	☐									
Operator	☐									
Offset/Setup	☐									
Process	☐									
Supplier	☐									
Training	☐									
Transport	☐									
Unapproved	☐									

FAULT CATEGORY

Landing Gear

- ☐ Bending
- ☐ Centre Not Concentric
- ☐ Cracks
- ☐ Crimp/Kink/Ripple/Wave
- ☐ Cuffs
- ☐ Crushing
- ☐ Heat Treat
- ☐ Inspection Strip in Tube
- ☐ Marks/Chatter
- ☐ Turning Sequence
- ☐ Wave/Twist in Tube

General

- ☐ Bend
- ☐ BOM/Route
- ☐ Broken/Damage/Defect
- ☐ Burrs
- ☐ Contamination
- ☐ Countersink
- ☐ Cut Too Short
- ☐ Drawing
- ☐ Drill Holes
- ☐ Finish
- ☐ Fit/Function
- ☐ Folio/Program
- ☐ Grain
- ☐ Hardware
- ☐ Inspection Incomplete/Unqualified
- ☐ Instructions Incomplete/Unclear
- ☐ Misaligned/off center
- ☐ Mislabeled
- ☐ Misread
- ☐ Off-set
- ☐ Out of Calibration
- ☐ Out of Sequence
- ☐ Outside Dimensions
- ☐ Over/Under tolerance
- ☐ Part Incorrect
- ☐ Part Lost/Missing
- ☐ Part Moved
- ☐ Positioned Wrong
- ☐ Power Loss/Surge
- ☐ Pressure/Forced
- ☐ Set-up
- ☐ Temperature/Cure
- ☐ Weld
- ☐ Wrong Stock Pulled
- ☐ Other

_____

_____

_____

Picklist Print

February-12-14 9:53:04 AM

Work Order ID: 113276

Parent Item: D3488-041

Parent Item Name: Blade Fitting LH

Start Date: 2/12/14 **Required Date:** 2/12/14

Start Qty: 12.00 **Required Qty:** 12.00

Comments:
IPP Rev:A New Issue 06-02-28 JLM
IPP Rev:B As per Rev B 06-03-30 JLM
IPP Rev:C Now On Doosan Lathe JLM Verified BY:DD

Component Item ID/ Item Name	Replacement Item ID	Mfg/ Purch	Bin Item	Primary Location	Last Location	Route Seq ID	Unit of Measure	Qty on Hand	Qty per Kit	Total Qty	Qty Issued	Date Issued	Status
ALS7-1032-225 X Insert	AELS8-1032-225 X ALS4-1032-225	Purchased	No				Each	280.0000		~~48~~ 40	40	14/02/27	
				Location		**Loc Qty**		**Loc Code**					
				FG		80							
					118520	80							
				ST280		200							
					m128179	200							
D6103-003 Round Billet, Aluminum		Manufactured	No				Each	20.0000		12			
				Location		**Loc Qty**		**Loc Code**					
				MAT043		20							
					110129	20							
				D 112311						10			

14/02/27 DAS 40 9-89

DQA: _____ Date: _____

WORK ORDER NON-CONFORMANCE / UPDATE

DART AEROSPACE

QA Closed: Date: Work Order update only ☐

Work Order: _____

Part No. _____

NCR No. _____

DISPOSITION

Rework ☐
Scrap ☐
Use-as-is ☐
Suspected Unapproved ☐

AGAINST DEPARTMENT/PROCESS

Skid-tube ☐ Crosstube ☐ Water Jet ☐ Engineering ☐
Machining ☐ Small Fab ☐ Prod. Eng. Coor. ☐ Quality ☐
Thermoforming ☐ Finishing ☐ Rec/Store/Packaging ☐ Other ☐
Large Fab ☐ Composite ☐ Supplier ☐

Root Cause		Date	Step	Qty	Description of work order update or non-conformance	Initial Chief Eng	Action Description	Sign & Date	Verification	QC Inspector
Design	☐									
Doc/Data	☐									
Equip/Tooling	☐									
Handling/Pre	☐									
Material	☐									
Operator	☐									
Offset/Setup	☐									
Process	☐									
Supplier	☐									
Training	☐									
Transport	☐									
Unapproved	☐									

FAULT CATEGORY

Landing Gear

☐ Bending
☐ Centre Not Concentric
☐ Cracks
☐ Crimp/Kink/Ripple/Wave
☐ Cuffs
☐ Crushing
☐ Heat Treat
☐ Inspection Strip in Tube
☐ Marks/Chatter
☐ Turning Sequence
☐ Wave/Twist in Tube

General

☐ Bend
☐ BOM/Route
☐ Broken/Damage/Defect
☐ Burrs
☐ Contamination
☐ Countersink
☐ Cut Too Short
☐ Drawing
☐ Drill Holes
☐ Finish
☐ Fit/Function
☐ Folio/Program
☐ Grain
☐ Hardware
☐ Inspection Incomplete/Unqualified
☐ Instructions Incomplete/Unclear
☐ Misaligned/off center
☐ Mislabeled
☐ Misread
☐ Off-set
☐ Out of Calibration
☐ Out of Sequence
☐ Outside Dimensions
☐ Over/Under tolerance
☐ Part Incorrect
☐ Part Lost/Missing
☐ Part Moved
☐ Positioned Wrong
☐ Power Loss/Surge
☐ Pressure/Forced
☐ Set-up
☐ Temperature/Cure
☐ Weld
☐ Wrong Stock Pulled
☐ Other

_____
_____
_____

DART AEROSPACE LTD	Work Order:	113276
Description: Blade Fitting, LH / Turning Detail for D3488-1/-2	Part Number:	D3488-1
Inspection Dwg: D3488 / DSK101 **Rev:** B / D		Page 1 of 2

FIRST ARTICLE INSPECTION CHECKLIST

[X] First Article [ ] Prototype

Drawing Dimension	Tolerance	Actual Dimension	Accept	Reject	Method of Inspection	Comments
Lathe Section						
Ø2.150	+/-0.005	2.150	✓		VEW	CNC-02
Ø2.780	+/-0.005	2.782	✓		"	"
Ø3.125	+/-0.010	3.125	✓		"	"
Ø3.346	+/-0.010	3.348	✓		"	"
0.125 x 45°	+/-0.010 x +/-0.1°	.125	✓		"	"
8.000	+0.030/-0.000	8.015	✓		"	"
9.250	+/-0.010	9.250	✓		"	"
0.188	+/-0.010	.188	✓		"	"
R0.032	+/-0.010	.032	✓		Rad G	
R0.062	+/-0.010	.062	✓		"	
Ø0.297	+0.005/-0.001	.298	✓		PIN G	
Ø0.430	+/-0.010	.432	✓		"	
0.100	+/-0.010	.100	✓		VEW	PAD-12
0.125	+/-0.010	.131	✓		"	"
2.620	+/-0.010	2.620	✓		"	"
3.500	+/-0.010	3.500	✓		"	"
1.005	+/-0.010	1.005	✓		"	"
Ø0.484	+0.005/-0.001	.484	✓		PIN G	
1.180	+/-0.010	1.180	✓		VEW	PAD-12
3.150	+/-0.010	3.150	✓		"	"
3.070	+/-0.010	3.070	✓		"	"
R0.063	+/-0.010	.063	✓		Rad G	

DART AEROSPACE LTD	Work Order:	113276
Description: Blade Fitting, LH / Turning Detail for D3488-1/-2	Part Number:	D3488-1
Inspection Dwg: D3488 / DSK101 **Rev:** B / D		Page 2 of 2

Drawing Dimension	Tolerance	Actual Dimension	Accept	Reject	Method of Inspection	Comments
Milling Section						
Ø0.508	+0.006/-0.001	.508	✓		Pin gage	—
0.750	+/-0.010	.750	✓		Caliper	MH-04
1.500	+/-0.010	1.500	✓		1	1
11.18	+/-0.030	11.171	✓		Dis Heist	31006
R0.062	+/-0.010	.062	✓		rad gage	—
0.125	+/-0.010	.115	✓		Caliper	MH-04
0.590	+/-0.010	.593	✓		Dis. Heist	31006
0.793	+/-0.010	.796	✓		Caliper	MH-04
1.351	+/-0.010	1.348	✓		Dis height	31006
1.317	+/-0.010	1.319	✓		Caliper	MH-04
1.802	+/-0.010	1.803	✓		Dis heisht	31006

Measured by:	DAS 40 9-09 MH	Audited by:	DP	Prototype Approval:	N/A
Date:	14/02/27 14/05/12	Date:	14-03-14	Date:	N/A

Rev	Date	Change	Revised by	Approved
A	06.03.31	New Issue	KJ/JLM	
B	08.09.19	Reformat P/O D3488-041	KJ/JLM	
C	08.12.02	Dimension 8.000 removed	KJ/JLM	

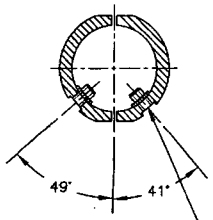

SECTION B–B

ø0.297
C'BORE ø0.430 x 0.100
INSTALL ALS4–1032–225 (OR AKS4–1032–225
OR ALS7–1032–225 OR AKS7–1032–225)
INSERTS AFTER FINISH
(4 PLACES)

4

113276 MCS
14-02-13

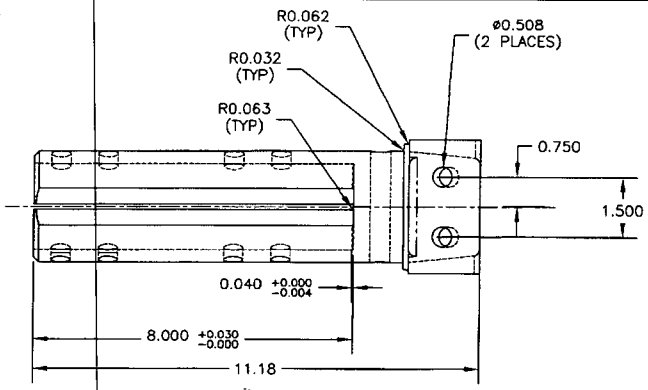

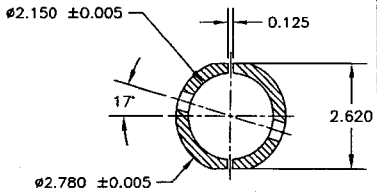

SECTION A–A

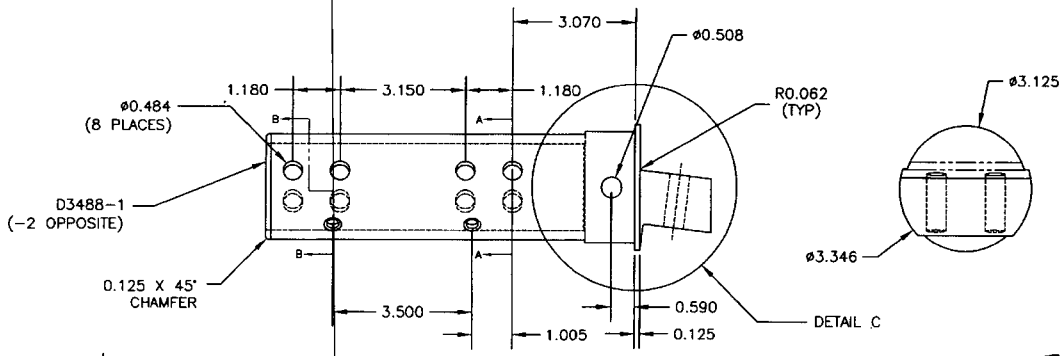

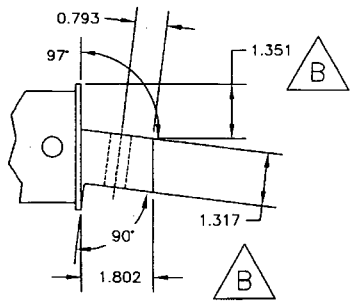

DETAIL C

D3488–041 SHOWN (D3488–042 OPPOSITE)

RELEASED
06.03.15 PH
PER DS
ECN #739

D3488–041/–042 BLADE FITTING ASSEMBLY PARTS LIST

QTY -041	QTY -042	PART NUMBER	DESCRIPTION
X		D3488-041	BLADE FITTING ASSEMBLY (LH)
	X	D3488-042	BLADE FITTING ASSEMBLY (RH)
1		D3488-1	BLADE FITTING (LH)
	1	D3488-2	BLADE FITTING (RH)
4	4	ALS4-1032-225 or AKS4-1032-225 or ALS7-1032-225 or AKS7-1032-225	INSERT

D3488–041/–042 BLADE FITTING

1) MATERIAL: MAKE D3488–1/–2 FROM ALUMINUM 7075–T7351 ROUND BAR PER QQ–A–225/9 (REF. DART MATERIAL SPEC M7075T73R)
2) FINISH: ACID ETCH, ALODINE PER DART QSI 005 4.1 POWDER COAT WHITE (REF 4.3.5.1) PER DART QSI 005 4.3
3) BREAK UNMARKED SHARP EDGES 0.010 TO 0.020
4) INSTALL INSERTS AFTER POWDER COAT
5) ALL DIMENSIONS ARE IN INCHES
6) TOLERANCES ARE PER DART QSI 018 UNLESS OTHERWISE NOTED

B	06.03.15	CHANGE THICKNESS
A	05.12.20	NEW ISSUE

COPYRIGHT © 2005 BY DART AEROSPACE USA, INC.

THIS DOCUMENT IS PRIVATE AND CONFIDENTIAL AND IS SUPPLIED ON THE EXPRESS CONDITION THAT IT IS NOT TO BE USED FOR ANY PURPOSE OR COPIED OR COMMUNICATED TO ANY OTHER PERSON WITHOUT WRITTEN PERMISSION FROM DART AEROSPACE USA, INC.

DESIGN PH	DRAWN BY PH	DART AEROSPACE USA, INC. PORT HADLOCK, WA	
CHECKED	APPROVED	DRAWING NO. D3488	REV. B SHEET 1 OF 1
DATE 06.03.15		TITLE BLADE FITTING	SCALE 1:3

DART

DESIGN	DRAWN BY	DART AEROSPACE USA, INC. PORT HADLOCK, WA
PH	PH	
CHECKED	APPROVED	DRAWING NO. DSK 101 — REV. D — SHEET 1 OF 1
DATE 06.05.09		TITLE D3488-1/-2 TURNING DETAIL — SCALE 1:3

A	05.12.21	NEW ISSUE
B	06.03.02	ADD TOLERANCES AND RADIUS
C	06.04.17	0.188 WAS 0.125
D	06.05.09	REMOVE DIAMETER FOR CHAMFER

06.05.09

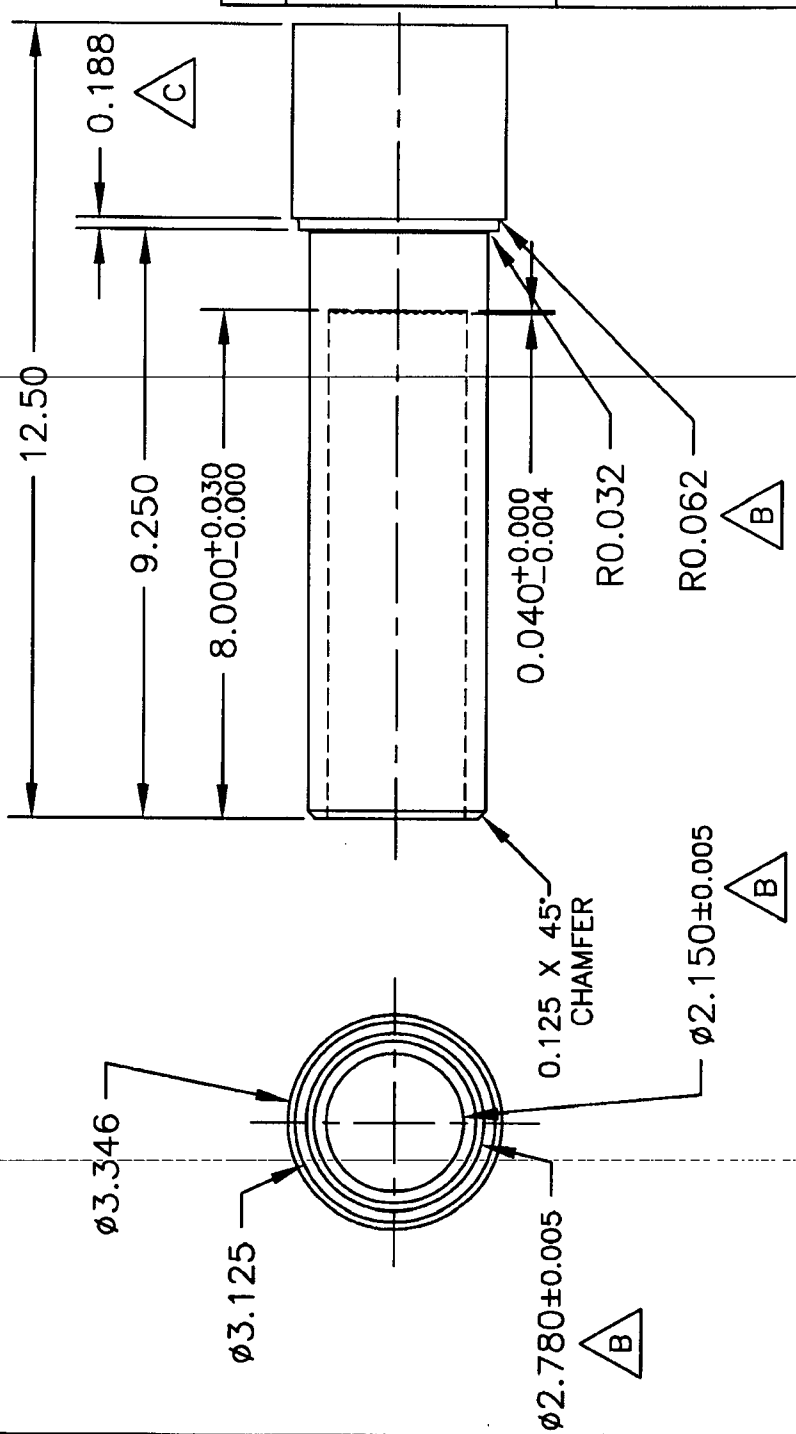

DSK 101

1) MATERIAL: MAKE FROM ALUMINUM 7075-T7351 ROUND BAR PER QQ-A-225/9 (REF. DART MATERIAL SPEC M7075T73R)
2) FINISH: NONE
3) BREAK UNMARKED SHARP EDGES 0.010 TO 0.020
4) ALL DIMENSIONS ARE IN INCHES
5) TOLERANCES ARE PER DART QSI 018 UNLESS OTHERWISE NOTED

Copyright © 2005 by DART AEROSPACE USA, INC.
THIS DOCUMENT IS PRIVATE AND CONFIDENTIAL AND IS SUPPLIED ON THE EXPRESS CONDITION THAT IT IS NOT TO BE USED FOR ANY PURPOSE OR COPIED OR COMMUNICATED TO ANY OTHER PERSON WITHOUT WRITTEN PERMISSION FROM DART AEROSPACE USA, INC.